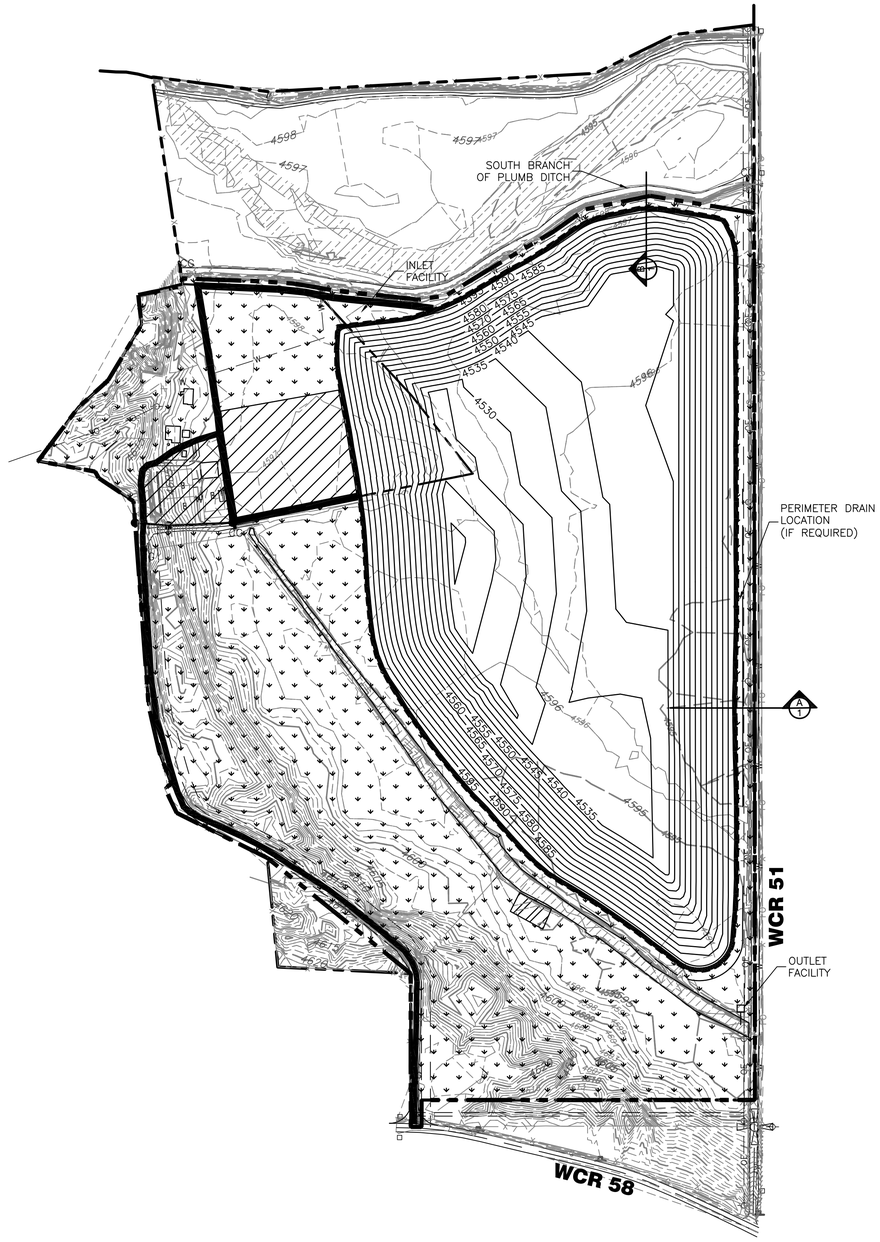

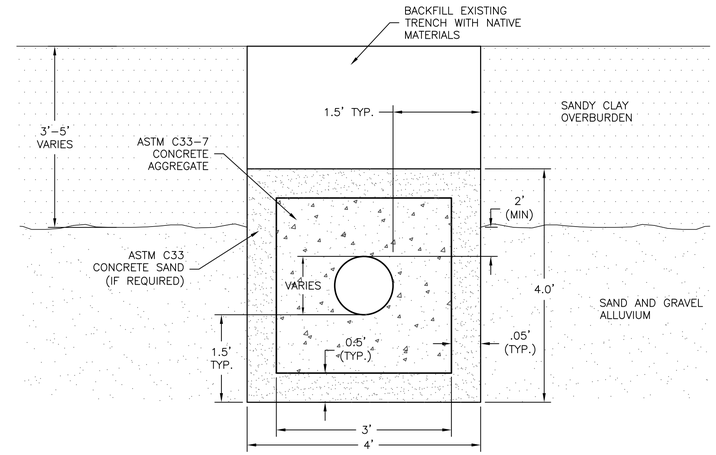

PERIMETER DRAIN DETAIL (TYPICAL SECTION IF REQUIRED)

N.T.S.

LEGEND:

- UTILITY POLE
- GUY WIRE
- GAS LINE MARKER
- GAS VALVE
- WELL
- WATER METER
- WATER FAUCET
- WATER LINE MARKER
- ELECTRIC TRANSFORMER
- TREE
- TELEPHONE PEDESTAL
- TELEPHONE LINE MARKER
- PROPERTY LINE
- FENCE LINE
- OVERHEAD ELECTRIC LINE
- EXISTING DUKE GAS
- UNDERGROUND WATER LINE
- EXISTING CONTOURS (2' INTERVALS)
- GRAVEL ROAD
- PROPOSED PERMIT BOUNDARY
- SLURRY WALL
- PROPOSED CONTOURS
- PERIMETER DRAIN
- DEWATERING INFILTRATION POND
- BASE COURSE SURFACED CONSTRUCTION YARD
- BASE COURSE ACCESS ROAD
- SEEDED AREA

RECLAIMED AREA TABULATION:

BASE COURSE SURFACED CONSTRUCTION YARD: 3.37 AC
BASE COURSE ACCESS ROAD: 3.25 AC
DEWATERING INFILTRATION POND: 0.14 AC
RESERVOIR AREA: 40.76 AC
SEED AREA: 33.94 AC
UNDISTURBED SLOUGH AREA: 1.49 AC

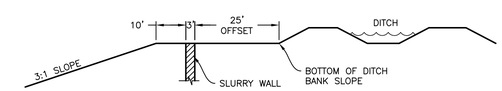

SOUTH BRANCH PLUMB DITCH OFFSET DETAIL

B/1 N.T.S.

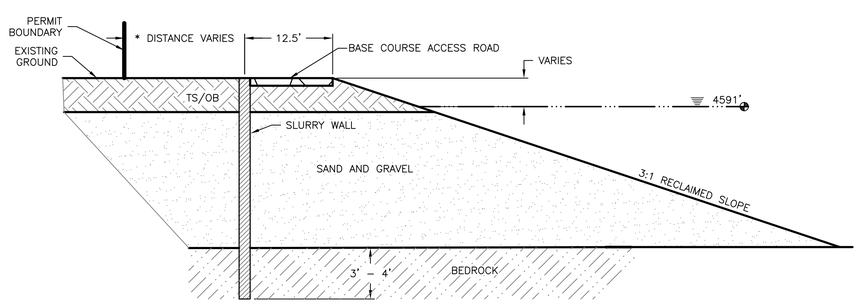

TYPICAL BACKFILL SECTION

A/1 N.T.S.

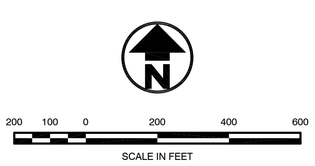

SLURRY WALL NOTES:

1. Bentonite Specifications

YP/PV ratio API Std. 13A	less than 3
Viscometer	greater than 30
Filtrate Loss	less than 15 cm3
Moisture Content ASTM D 2216	less than 10 percent

Test results for each lot of bentonite must be provided.

2. Water Specifications

pH	6–8
Hardness	less than 200 ppm
Total Dissolved Solids	less than 500ppm
Oil, organics, acids, alkali	less than 50 ppm each
Chloride	report

3. Bentonite Slurry General Specifications
The initial bentonite slurry must be tested prior to placement in the trench. The slurry may be mixed in high shear mixers or mixed and hydrated in slurry hydration ponds. In general, a minimum hydration time of 8 hours will allow the bentonite slurry to meet all criteria. A minimum bentonite content of 6 percent in the slurry by weight is required.

4. Bentonite Slurry Testing Specifications before Placement

Viscosity	Measured w/ Marsh Funnel (API RP 13B–1) less than 40 sec
Density	less than 64 pcf
Filtrate Loss	less than 20 cm3
pH	6.5 to 10

The tests listed above should be run 1 or 2 times per shift and at least once per batch of slurry. The slurry must be further tested after placement in the trench. The tests conducted are for viscosity, density, sand content, and pH. Two sets of tests per shift at two locations in the trench (approximately 2 feet below the slurry surface and 2 feet above the bottom of the trench) are required. If the density of the slurry in the trench exceeds 85 pcf the excess solids must be removed by desanding or the slurry replaced with fresh slurry. The slurry level must be maintained at least 3 feet above the ground water elevation and no more than 2 feet below the top of the working platform.

5. Bentonite Slurry Testing Specifications after Placement
Unit Weight 1.03 to 1.40 gm/cm3
Sand Content ASTM D 4381–84(1993)e10 to 20 percent by volume

6. Soil–Bentonite Backfill Specifications
S–B backfill slump ASTM C 143 1 set per 100 cu. yds.

Slump 2–6 inches

S–B backfill gradation 1 set per 300 cu. yds.

Screen (US Standard)	Percent by Dry Weight
3 inch	100
# 4	40–80
#40	25–60
#200	20–40

Minimum Plasticity Index of 10

7. Key Trench and Slurry Wall Cap Specifications
During excavation, soundings should be obtained to determine the elevations of the top of the key layer, the bottom of the excavation, and the bottom of the trench prior to backfilling. If sediments in excess of 2 inches have accumulated it is necessary to clean the trench bottom by airlift pumps or excavation equipment to remove the sand and sediment that has settled. The trench bottom should be cleaned, as a minimum, at the beginning of each shift. Soundings should be obtained approximately every 20 feet.

Adequate keying in the S–B backfill to an impermeable layer at the base of the wall will be required and specified in the final design report for the slurry wall. The design documents will include a description of the key in layer and describe how trench cuttings or other observations will be used to assure that the slurry wall will be adequately keyed. Temporary slurry wall protection will be required in the form of a noncompacted soil cover placed within one day over each backfilled 100 foot reach. The temporary cover is removed after settlement (approximately 2 weeks) and replaced with a compacted clay cover over the completed slurry wall.

8. Post Construction Testing
Post construction testing will be conducted in accordance with the "Colorado State Engineer's Office."

9. Above specifications (notes 1–8) are provided as a general guideline for permitting purposes. Final specifications and design criteria will be developed during the final design of the slurry wall.

J&T Consulting, Inc.
1400 W 122nd Avenue - Suite 120
Westminster, CO 80234
Ph: 303-457-0735 Fax: 303-920-0343
www.j-tconsulting.com

Exhibit F

Reclamation Plan Map

Journey Ventures, LLC
Journey Ventures Pit

M-2008-080

REVISIONS

No	Date	By	Chk	Description
1	3.19.15	TPY	JCY	Technical Revision No. 1
2	3.12.19	WSS	JCY	Technical Revision No. 4
3	4.23.19	WSS	JCY	Technical Revision No. 4 Comments
4	6.12.23	KJL	JCY	Technical Revision No. 5

J&T Consulting, Inc.

Job #	07113
Date	9/15/08
Drawn By	WSS
Designed By	TPY
Checked By	JCY
File	JT-Reclamation
Scale	1" = 200'

Sheet: 1 Of: 1

P:\07113 Kersey Gravel Pit\Drawings\Reclamation Plan\JT-Reclamation.dwg, Layout1, 6/21/2023 1:10:32 PM