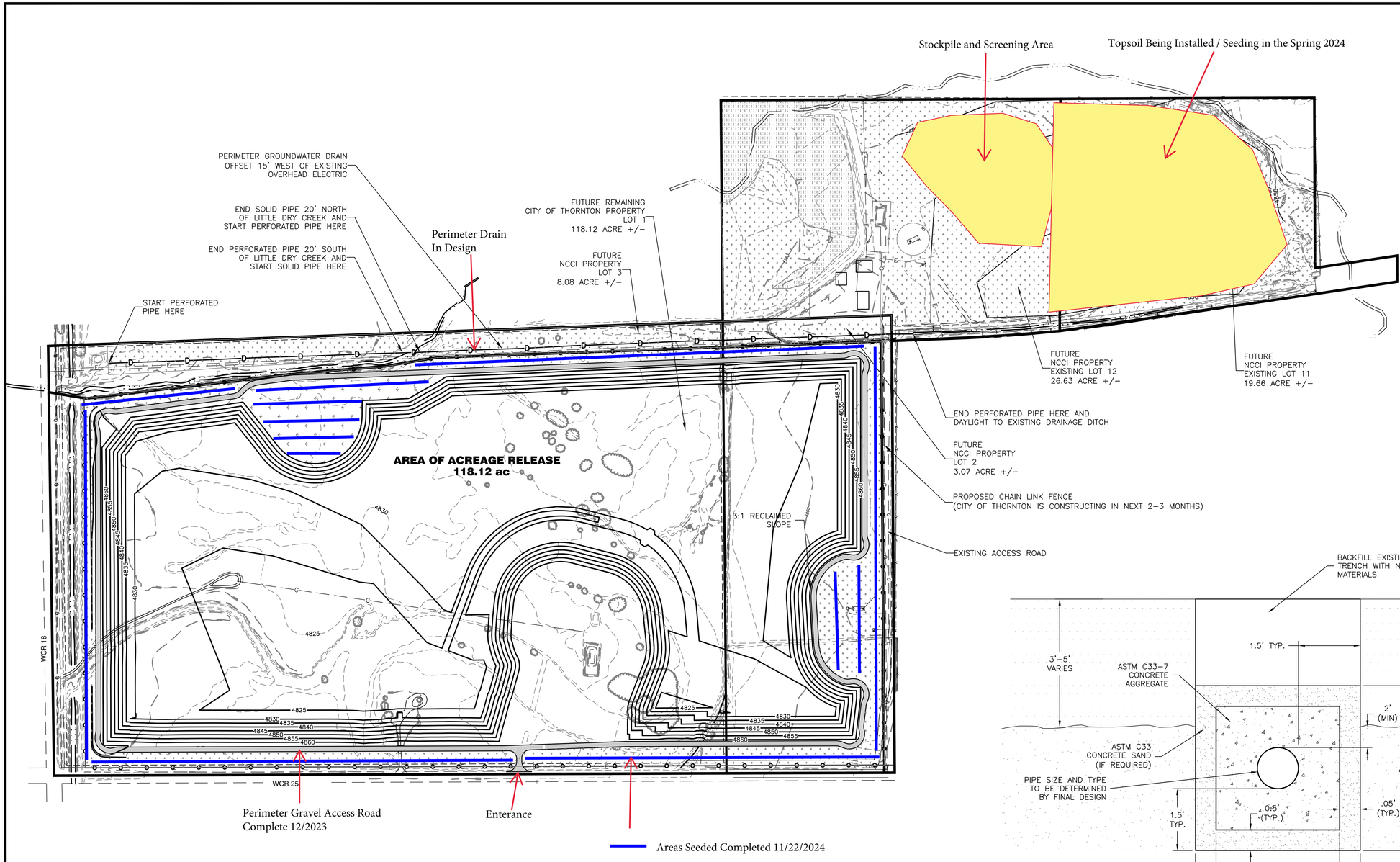

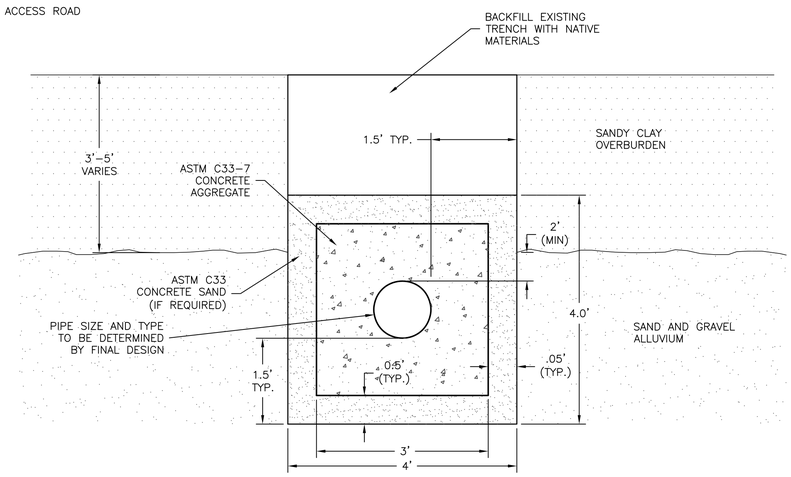

PERIMETER DRAIN DETAIL
N.T.S.

Weed Control
- Application Date: 7/13/2023
- 2% - 3% Landmaseter, Round Up and Polaris to treat the following:
  - Canadian Thistle
  - Koshia
  - Scotch Thistle
  - Knapp Weed
  - Downy

LEGEND:

4852	EXISTING CONTOURS
4852	PROPOSED CONTOURS
	PROPERTY BOUNDARY
	PROPOSED FENCE
	PROPOSED PERIMETER DRAIN
	PROCESSING & STOCKPILE AREA
	LOT BOUNDARY
	SEEDING AREA

200 100 0 200 400 600
SCALE IN FEET

J&T Consulting, Inc.
305 Denver Avenue - Suite D
Fort Lupton, CO 80621
Ph: 303-857-6222 Fax: 303-857-6224
www.j-tconsulting.com

NCCI Pit #1

Exhibit F - Reclamation Plan Map

Northern Colorado Constructors, Inc.

M-2001-107

REVISIONS

No.	Date	By	Chk	Description

J&T CONSULTING

J.C. York

Job #	06109
Date	02.08.24
Drawn By	TWT
Designed By	TPY
Checked By	JCY
File	JT-Reclamation Plan
Scale	1"=200'

Sheet: 2 Of: 2

P:\06109 NCCI Pit 1\Drawings\Reclamation Plan\JT-Reclamation Plan 2024.dwg, JT-Rec Plan, 2/8/2024 9:14:33 AM