Mancos River - Henry Bolen Ditch Company

Construction Plans for Irrigation Diversion Improvements for the Bolen Irrigation Ditch

Location Map

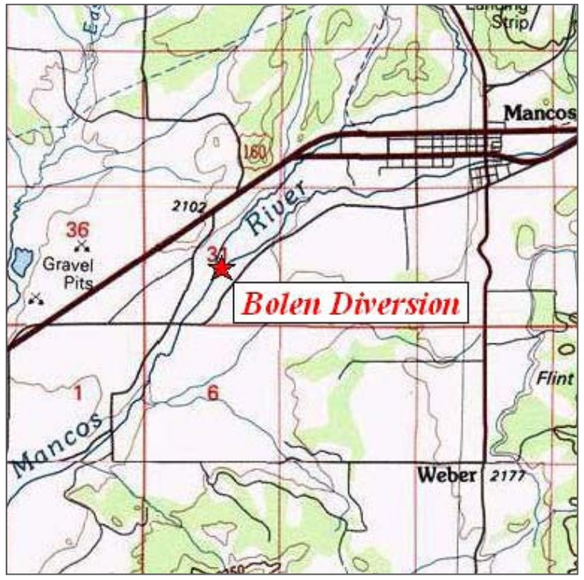

Index of Drawings

1/7 Cover Sheet
2/7 Site Plan - Detail
3/7 Long. Profile
4/7 Details & Spec's - 1
5/7 Details & Spec's - 2
6/7 Details & Spec's - 3
7/7 Operation & Maintenance Plan

Estimate of Quantities

Item	*Unit*	*Quantity*
sandstone boulders (116)	CY	97
2'x2'x6' concrete blocks (10)	CY	8.9
minor channel regrading	CY	21
pool excavation	CY	10
bar excavation	CY	4

Utilities Statement

I realize that as the ditch owner, I and/or the Contractor I hire, may be liable for any damageto utilities during construction. NRCS nor BasinHydrology makes no representation that any utilities shown are exactly located or that all utilities present are shown.

I will provide the NRCS with the Utility Notification Center of Colorado (UNCC) ticket number my contractor has acquired prior to start of construction.

Landowner or Agent _____ Date _____

UNCC Ticket Number _____

Call Utility Notification Center of Colorado (1-800-922-1987. Call 2 business days in Advance before you dig, grade or excavate for the marking of underground utilities.

Owners Statement

This Plan has been discussed with me and I am in agreement with the calculations and design.

Ditch Co. Representative _____ Date _____

Designers Statement

To the best of my professional knowledge, judgment and belief, these plans meet applicable NRCS standards.

T. Mark Oliver, Basin Hydrology, Inc. _____ Date _____

DRAFT

Cover

DATE 7-10-11v Bolen 7-2011.dwg

BASIN HYDROLOGY, INC.
river, watershed & wetland studies
2340 CR 203 Durango, CO 81301
970-903-0366

Mancos River - Bolen Diversion
In-Channel Rock Diversion Structure
Henry Bolen Ditch Company
NW 1/4 SE 1/4 Sec 31, T36N, R13W
Montezuma County, Colorado

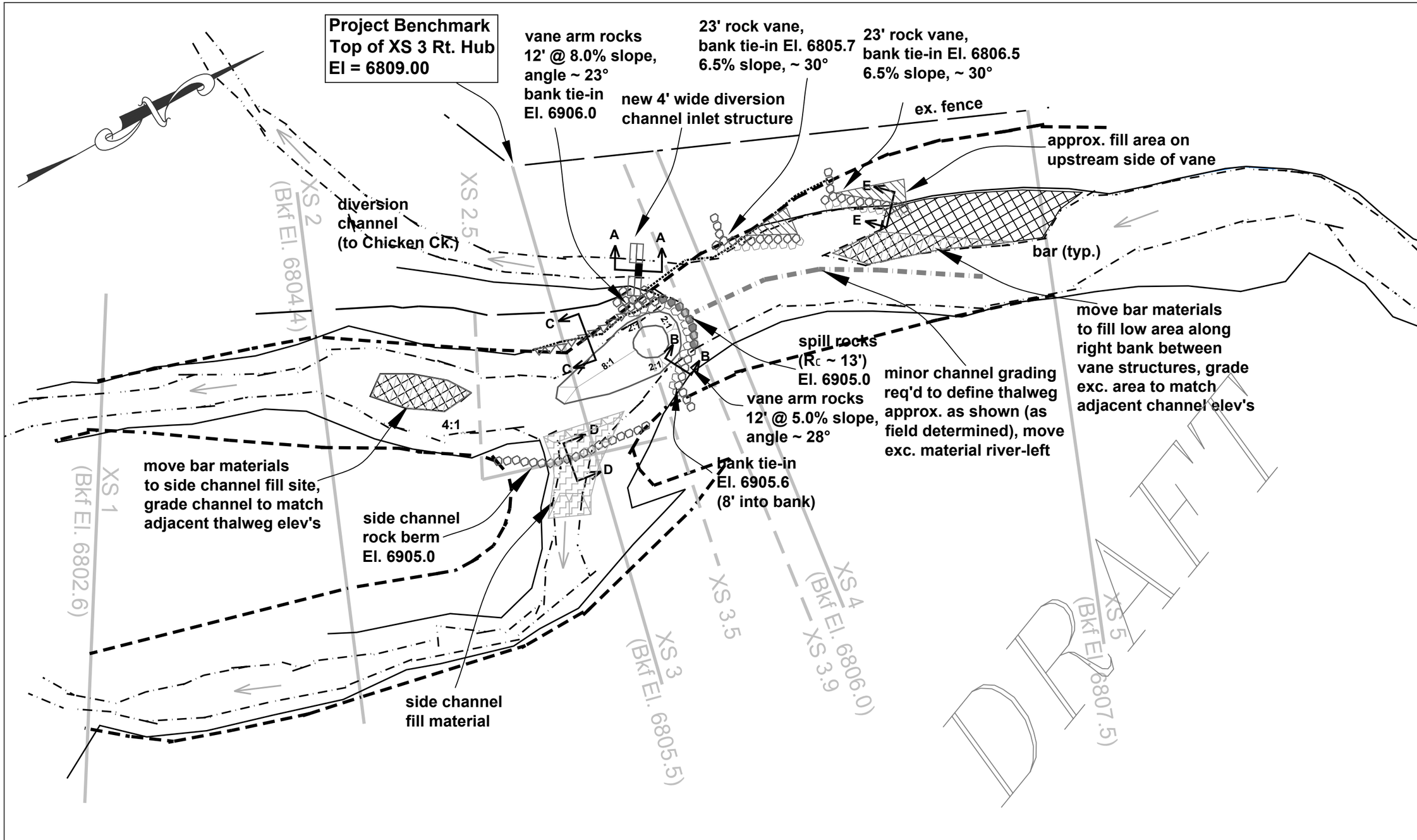

Site Plan

DATE 7-10-11v Bolen 7-2011.dwg

30 15 0 30 60 90

SCALE IN FEET

BASIN HYDROLOGY, INC.
river, watershed & wetland studies
2340 CR 203 Durango, CO 81301
970-903-0366

Mancos River – Bolen Diversion
In-Channel Rock Diversion Structure
Henry Bolen Ditch Company
NW 1/4 SE 1/4 Sec 31, T36N, R13W
Montezuma County, Colorado

SHT 2 of 7

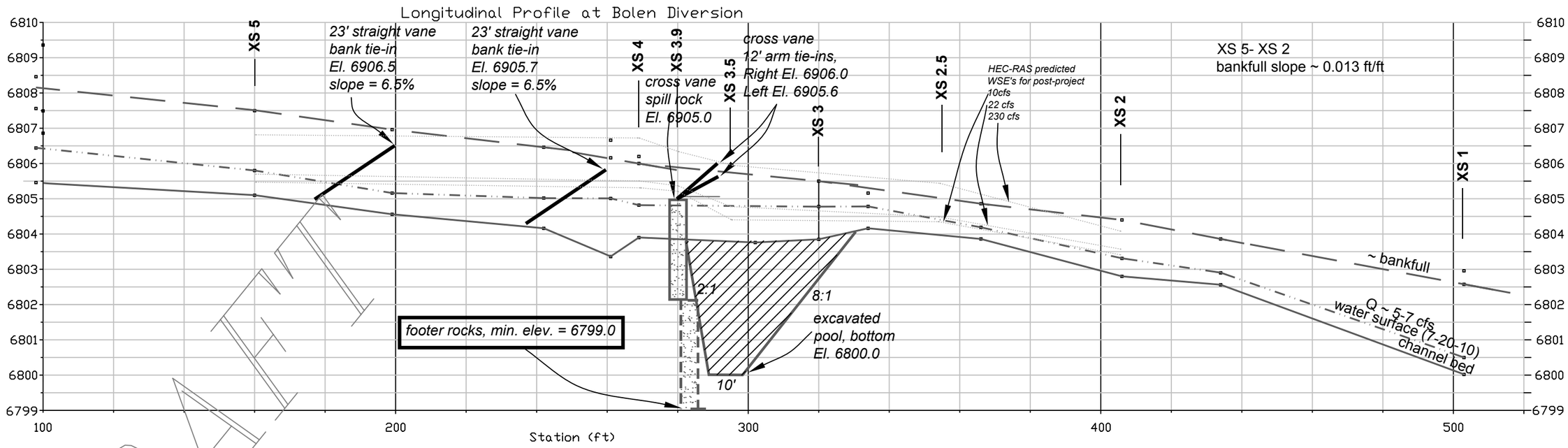

DRAFT

Long. Profile

DATE 7-10-11v Bolen 7-2011.dwg

Scale as Shown

BASIN HYDROLOGY, INC.
river, watershed & wetland studies
2340 CR 203 Durango, CO 81301
970-903-0366

Mancos River – Bolen Diversion
In-Channel Rock Diversion Structure
Henry Bolen Ditch Company
NW 1/4 SE 1/4 Sec 31, T36N, R13W
Montezuma County, Colorado

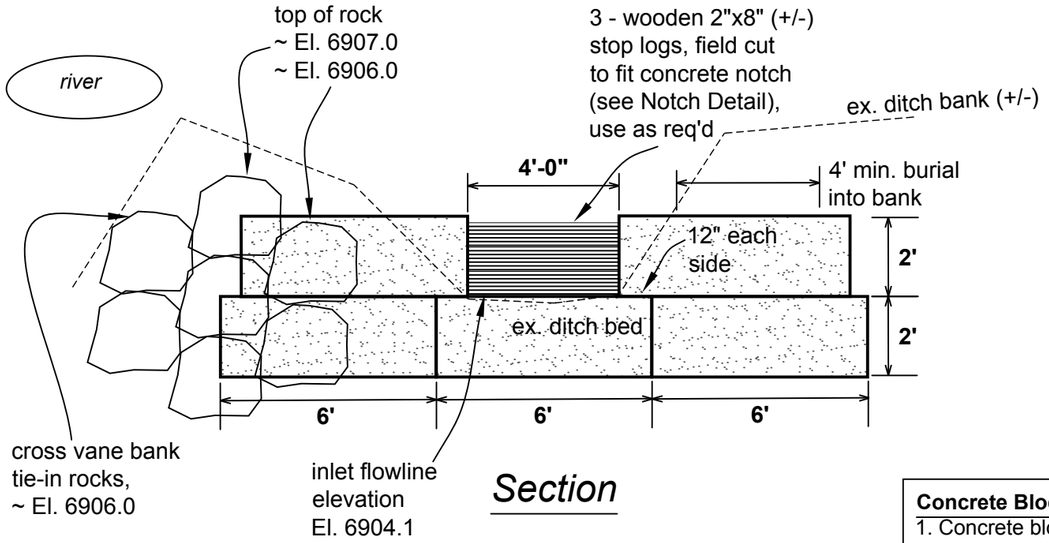

Section

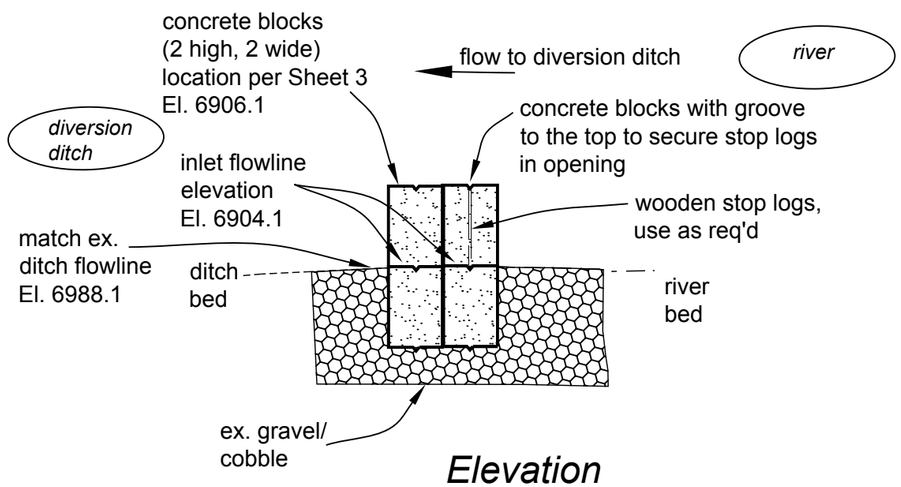

Elevation

Diversion Channel Inlet Structure
nts
DETAIL A - A

Concrete Blocks

1. Concrete blocks [2'(h) x 2'(w) x 6'(l)], w/ top & side tongue & groove for stacking/joining, except as shown.

2. Blocks shall be set so that groove is up & groove shall be on both sides of inlet and sluice openings.

3. Excavate min. width trench necessary to install concrete blocks. Replace excavated material & compact.

4. Prior to setting blocks, ensure that their foundation is comprised of compacted gravels & cobbles (i.e., not sand, etc.).

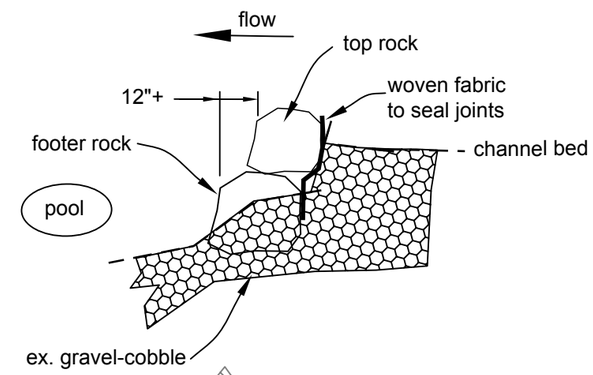

Cross Vane Footer Rock
nts
DETAIL B - B

See Footer Rocks Note, Sheet 8

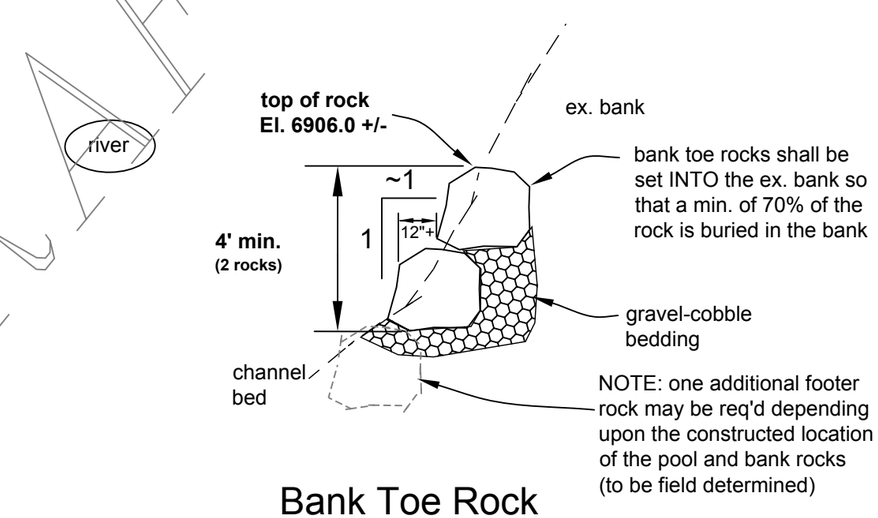

Bank Toe Rock
nts
DETAIL C - C

DRAFT

Details & Spec's - 1

DATE 7-10-11v Bolen 7-2011.dwg

Scale as Shown

BASIN HYDROLOGY, INC.
river, watershed & wetland studies
2340 CR 203 Durango, CO 81301
970-903-0366

Mancos River – Bolen Diversion
In-Channel Rock Diversion Structure
Henry Bolen Ditch Company
NW 1/4 SE 1/4 Sec 31, T36N, R13W
Montezuma County, Colorado

rock locations per Sheet 2

1. Use exc. material from pool as fill material in side channel.
2. Fill material to only be placed within ex. side channel.
3. Fill material shall be track compacted.
4. Salvage & reset any grass vegetation (as mats) if their removal is req'd.

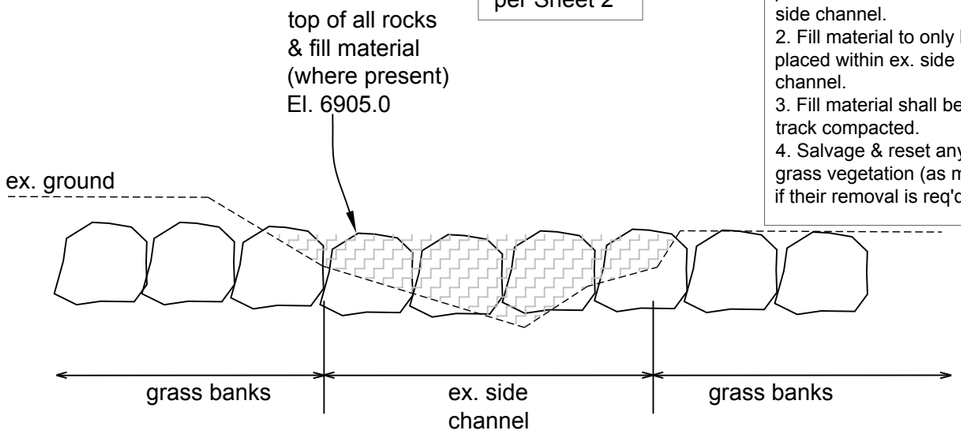

Section

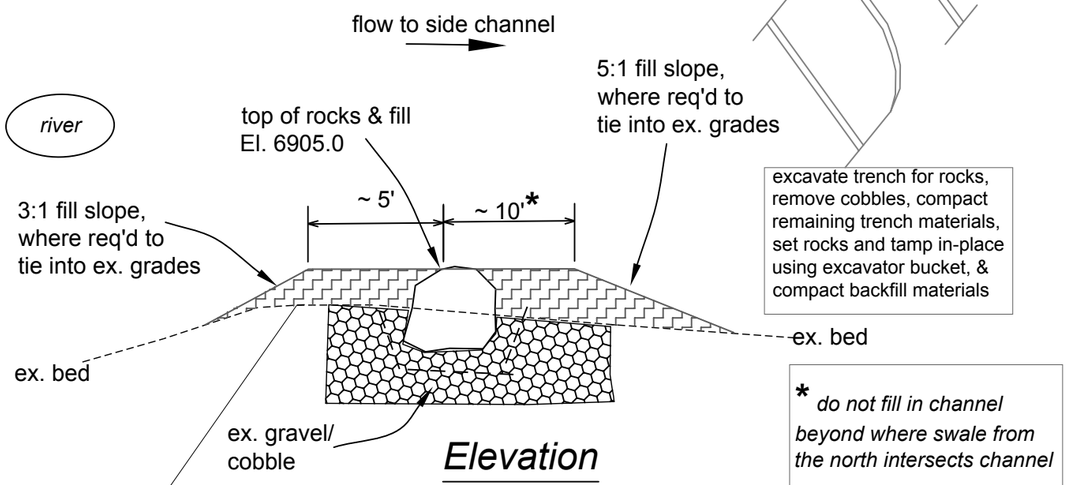

excavate trench for rocks, remove cobbles, compact remaining trench materials, set rocks and tamp in-place using excavator bucket, & compact backfill materials

Elevation

Side Channel Rock & Fill Berm
nts
DETAIL D - D

* *do not fill in channel beyond where swale from the north intersects channel*

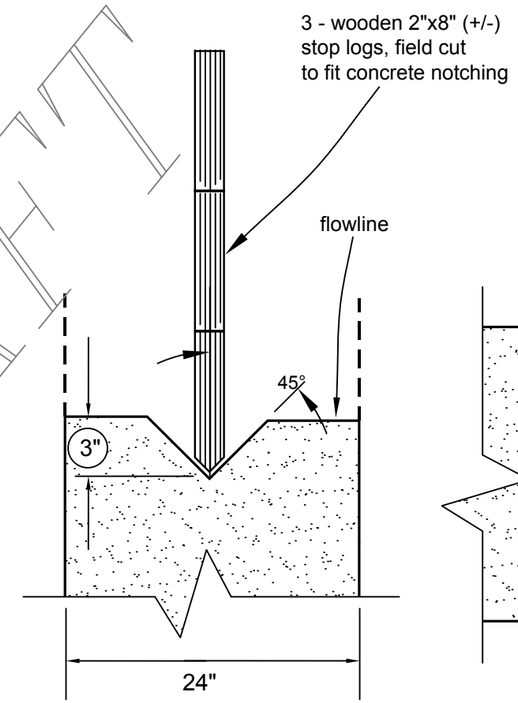

Elevation

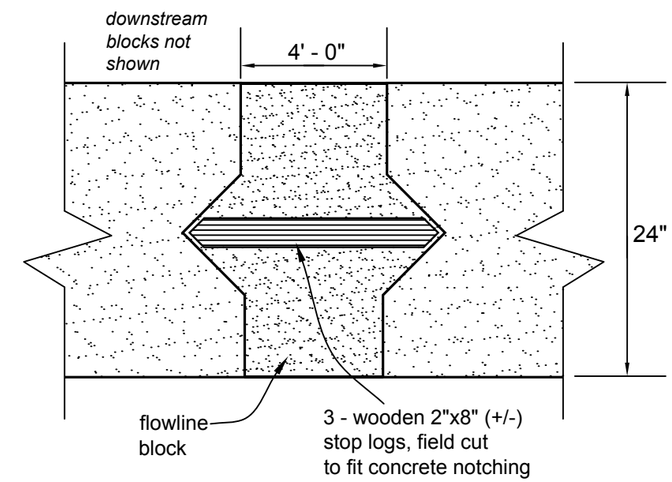

Plan View

Stop Log Notch Detail
nts

NOTE: *stop logs provided & constructed by Bolen Ditch Co.*

DRAFT

Details & Sec's - 2

DATE 7-10-11v Bolen 7-2011.dwg

Scale as Shown

BASIN HYDROLOGY, INC.
river, watershed & wetland studies
2340 CR 203 Durango, CO 81301
970-903-0366

Mancos River – Bolen Diversion
In-Channel Rock Diversion Structure
Henry Bolen Ditch Company
NW 1/4 SE 1/4 Sec 31, T36N, R13W
Montezuma County, Colorado

1) All top rocks shall be supported by footer rocks.
2) Top elev. of footer rock may be below ex. channel bed.

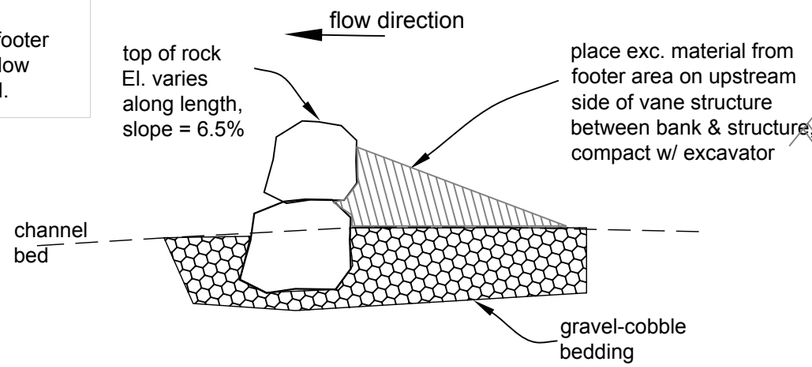

Straight Rock Vane
nts

DETAIL E - E

DRAFT

Specifications

Concrete Blocks

Concrete blocks shall be 2'(h) x 2'(w) x 6'(l) with top & side notches for stacking/joining (except 3' lengths as shown).

All Rock Structures

1. The smallest acceptable rock shall be 18" thick, 36" long, 30" wide.

2. The majority of rocks shall be approx. 24" thick, 48" long, 36" wide.

3. Only angular rock (shot) rock shall be used (i.e., no round boulders).

4. Ideally, rock shall have a relatively smooth surface along its long axis for stacking and to create a smooth spill surface, espec. for the cross vane.

Footer Rocks

1. Footer rocks are required to support every surface rock.

2. Footer rock size shall be equal to or larger than the surface rocks.

3. Footer rocks shall extend downstream of the surface rock a minimum of 12".

Cross Vane Structures

1. Spill rocks shall be set to create a uniform elevation surface. Rocks shall be selected and installed so that the amount of water flowing between the spill rocks is minimized.

2. A tightly woven fabric shall be placed on the upstream side of all structure rocks prior to backfilling for the purpose of trapping fines and minimizing the amount of water seeping through rock joints.

3. A mix of fine and coarse materials shall be used as backfill between the cross vane arms and the bank. Compacted fill shall transition from the top of the vane rock up to the adjacent bank.

Details & Spec's - 3

DATE 7-10-11v Bolen 7-2011.dwg

Scale as Shown

BASIN HYDROLOGY, INC.
river, watershed & wetland studies
2340 CR 203 Durango, CO 81301
970-903-0366

Mancos River - Bolen Diversion
In-Channel Rock Diversion Structure
Henry Bolen Ditch Company
NW 1/4 SE 1/4 Sec 31, T36N, R13W
Montezuma County, Colorado

Operations & Maintenance Plan

General

Rock structures, unlike concrete or other engineered structures, require a high degree of maintenance, especially during the establishment period. These structures must receive regular and timely maintenance to continue to function properly. Failure to provide maintenance in a time manner could result in complete failure of the structure. All structures modify the flow regime of the watercourse. The modified flow from the structure results in changes to the channel. As such, each structure will require periodic maintenance. In some cases, additional structures may be required to adequately protect the system. Items to help a good operation and maintenance program include:

1. Stockpile any remaining appropriately sized rock at the site for repair needs.

2. Check structures regularly during and after the first major flow event following installation. Any erosion occurring around the structures should be evaluated and repaired as needed. Some corrective action may be required during the high flow event.

3. After the peak flow recedes, check the structures for signs of damage. Pay particular attention to missing or displaced rocks, displaced or leaning concrete blocks, bank erosion, and excessive buildup of trash or other debris.

4. Replace missing or dislodged rocks with properly sized material.

5. Check the adjacent banks for signs of excessive erosion that may require additional work.

6. Remove any debris that collects on the structures or in the channel. Debris in the channel that is not moved can result in the development of vegetative islands that can adversely affect the channel.

7. If revegetation methods are a component of the project, monitor success of the seedings and reseed any areas that have not established successfully. If tree or shrub plantings were used, replace any that have not survived.

8. Take extreme care when excavating accumulated debris or sediment near any structures to avoid dislodging structure rocks or concrete blocks. Care shall also be taken to ensure that any excavation does not disturb the supporting foundation of any structures. The supporting foundation can extend for a relatively long distance from the structure.

Diversion Channel Inlet

A. Ensure concrete blocks are set so that the groove forms the bottom and both sides of the opening.

B. Remove any excess concrete from within the grooves to create a smooth sliding surface and to create a snug fit for stop logs.

C. Field cut stop logs AFTER step B to determine the exact length of the stop log and the groove angles. Additional "2 bys" may be attached to the bottom stop log and to each end of a stop log to fill more of the notch space and to improve the seal.

D. DITCH INLET - It is anticipated that stop logs will not be used except maybe during very high river flows to prevent excessive flows from entering the diversion channel. Moderate flows to the diversion channel would be desirable to limit sediment deposition near the ditch inlet.

DRAFT

DATE 7-10-11v Bolen 7-2011.dwg

BASIN HYDROLOGY, INC.
river, watershed & wetland studies
2340 CR 203 Durango, CO 81301
970-903-0366

Mancos River – Bolen Diversion
In-Channel Rock Diversion Structure
Henry Bolen Ditch Company
NW 1/4 SE 1/4 Sec 31, T36N, R13W
Montezuma County, Colorado